conspire

ConSpire encapsulates modern industrial design with functionality at it's heart. We make unique basins and bathroom furniture for individuals who appreciate exceptional design and quality combined.

conspire

Our Story

Since long before ConSpire's conception, founder Martijn Winter has possessed a strong vision for concrete's potential in contemporary design. He knew that by embracing it's rugged, industrial nature whilst searching for inspiration from natural and architectural forms, he could produce a collection of completely unique basins and bathroom furniture renowned for it's outstanding quality and design.

Today, the ConSpire collection is a showcase of diversity, encapsulating modern industrial design with functionality at its heart.

We entrust talented craftsman with the responsibility of creating each basin to the highest degree of quality by hand. That includes applying 4 unique protective coatings that we developed alongside industry leading experts especially for the ConSpire range.

We believe that longevity is the true mark of quality - these coatings and our rigorous production methods ensure that each product carrying our name is preserved in all it's glory for years to come.

Dusk Grey

Basic

The Basic is full of bold industrial charm. Distinctive edges are divided by a sweeping natural curve making this miniature concrete sink a humble classic. Perfect for small bathrooms and restrooms.

Size (H x W x L)
110 x 230 x 400 mm

Packing Size
150 x 260 x 430 mm

Available finishes
Natural concrete - Dusk Grey - Vintage Brown - Copper green

Drain diameter
45 mm

Tap diameter
30 mm

Wall mount suitable
Yes - brackets included

Weight
10 kg

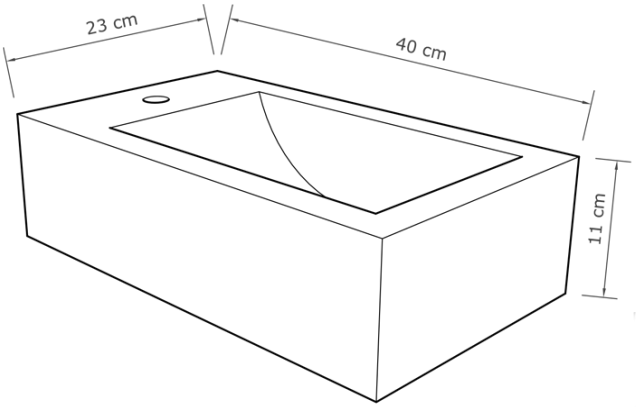

Available finishes

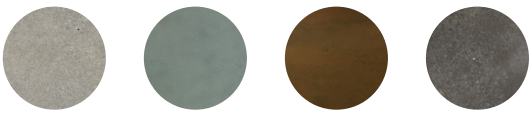

Natural Concrete

Basic +

The Basic is full of bold industrial charm. Distinctive edges are divided by a sweeping natural curve making this miniature concrete sink a humble classic. Perfect for small bathrooms and restrooms.

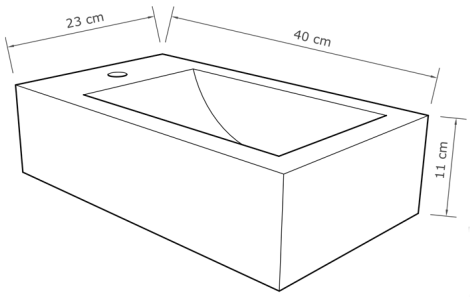

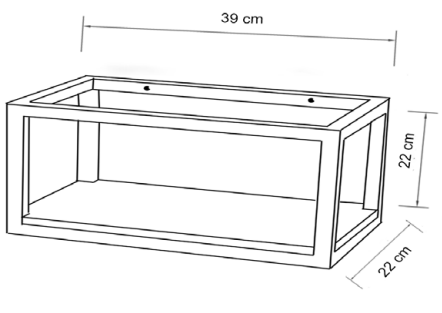

Size basin (H x W x L)
110 x 230 x 400 mm

Packing Size
150 x 260 x 430 mm

Size holder (H x W x L)
220 x 220 x 390 mm

Packing Size
240 x 240 x 410 mm

Available finishes
Natural concrete - Dusk Grey - Vintage Brown - Copper Green

Material holder
Galvanized powdercoated steel

Color holder
Math Black

Drain diameter
45 mm

Tap diameter
30 mm

Wall mount suitable
Yes - holder included

Weight
16 kg

Available finishes

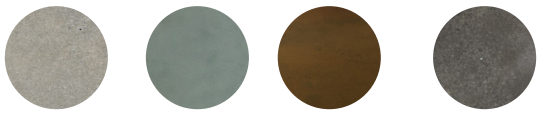

Copper Green

Grosio

Exceptional stylish and adventurous are words that come in mind of this convenient sink. Available in raw finishes to add outstanding character to your bathroom.

Size (H x W x L)
110 x 300 x 600 mm

Packing Size
140 x 330 x 630 mm

Available finishes
Dusk Grey - Vintage Brown - Copper Green

Wall mount suitable
Yes, brackets included

Drain diameter
45 mm

Weight
32 kg

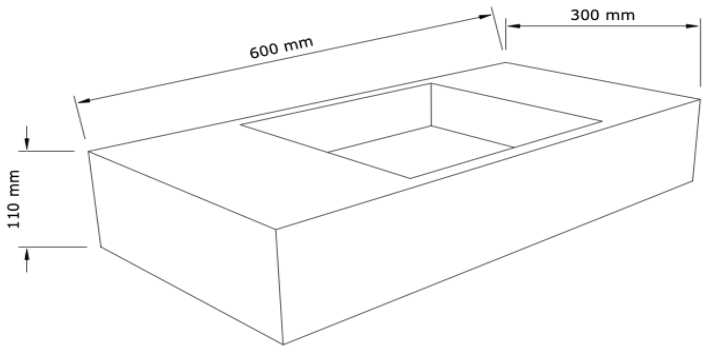

Available finishes

Milano

Unlike any of the other models, the Milano has distinctively thick, round edges. This uniquely smooth form makes it especially appealing. Perfect to show off our fine Terrazzo or flawless concrete.

Size (H x W x L)
130 x 450 x 450 mm

Packing Size
180 x 500 x 500 mm

Available finishes
LIght Grey - Dark Grey - Dusk Grey - Vintage Brown - Copper Green - White Terrazzo - Black Terrazzo

Drain diameter
45 mm

Weight
25 kg

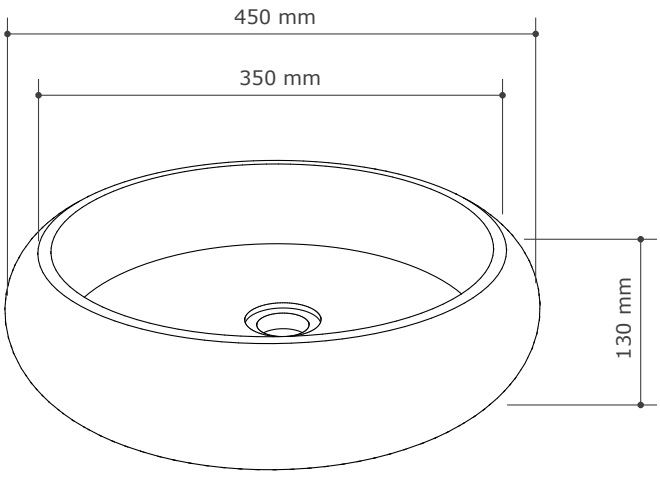

Available finishes

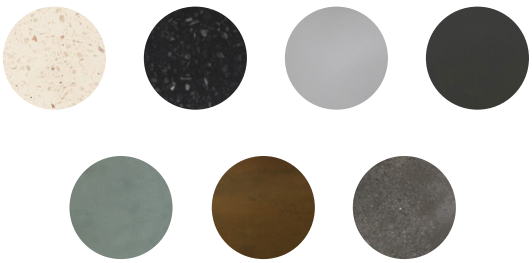

Dusk Grey

Udinesse

Udinesse flaunts simple, irresistible curves and clean, hard edges, tirelessly sanded to perfection by our team. No gimmicks - this basins stands for quality through minimalism.

Size (H x W x L)
120 x 420 x 420 mm

Packing Size
150 x 440 x 440 mm

Available finishes
Light Grey - Dark Grey - Natural Concrete - Dusk Grey - Vintage Brown - Copper Green - White Terrazzo - Black Terrazzo

Drain diameter
45 mm

Weight
15 kg

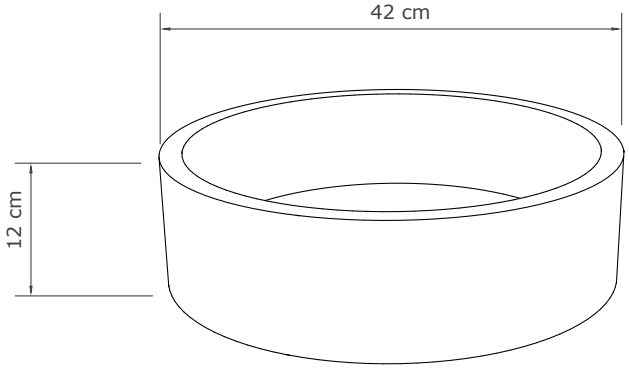

Available finishes

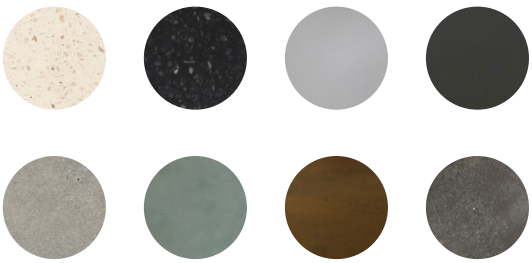

Palermo

Palermo's charming size, along with it's simplicity and modernism make it the perfect bathroom companion. Available in our full range of colour options - find your style.

Size (H x W x L)
120 x 300 x 300 mm

Packing Size
180 x 350 x 350 mm

Available finishes
Light Grey - Dark Grey - Natural Concrete - Dusk Grey - Vintage Brown - Copper Green - White Terrazzo - Black Terrazzo

Drain diameter
45 mm

Weight
8 kg

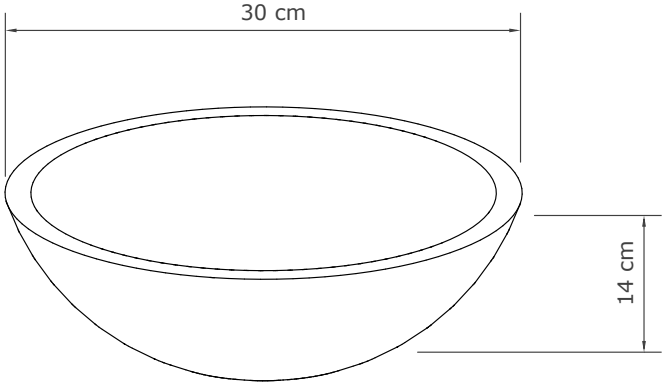

Available finishes

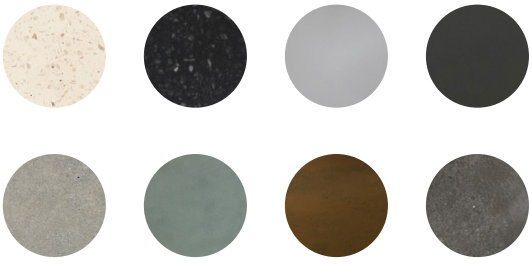

Palermo Grande

With it's timelessly smooth and pure form, Palermo`Grande's minimalism and simplicity is unparalleled. The perfect canvas for a range of stunning finishes, including our charming copper green and vintage brown.

Size (H x W x L)
140 x 400 x 400 mm

Packing Size
200 x 450 x 450 mm

Available finishes
Light Grey - Dark Grey - Natural Concrete - Dusk Grey - Vintage Brown - Copper Green - White Terrazzo - Black Terrazzo

Drain diameter
45 mm

Weight
11 kg

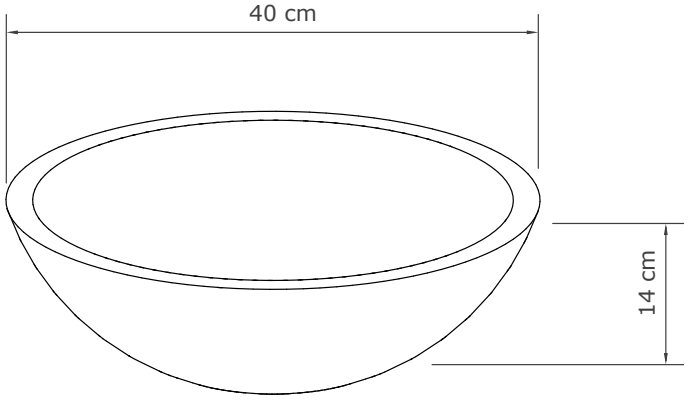

Available finishes

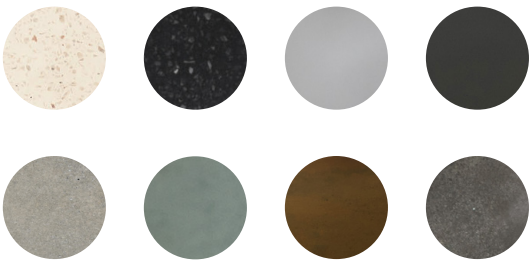

Venezia

Soft and smooth, yet sharp and modern - the Venezia is not your typical basin. Additionally, this cone form creates interesting interplay between flowing water and the basins interior. Ultimately, this basin is made to create high visual impact.

Size (H x W x L)
160 x 405 x 405 mm

Packing Size
210 x 455 x 455 mm

Available finishes
Light Grey - Dark Grey - Dusk Grey - Vintage Brown - Copper Green - White Terrazzo - Black Terrazzo

Drain diameter
45 mm

Weight
10 kg

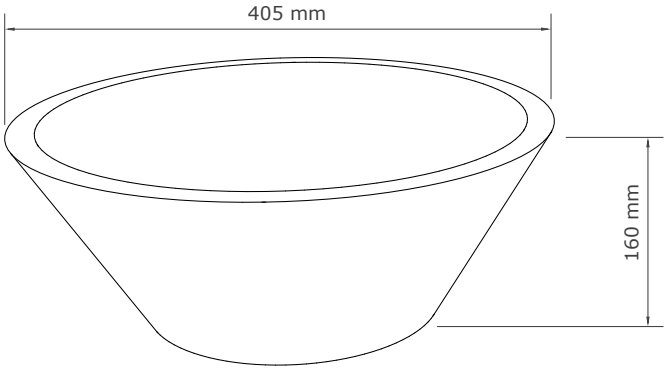

Available finishes

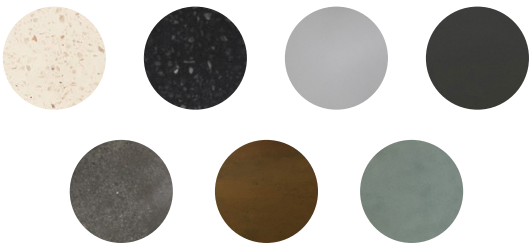

Napoli

An array of concentric circles come together to make the Napoli, smooth, alluring and certainly eye-catching. The centre circle allows water to flow seemlessly between the outer gap.

Size (H x W x L)
110 x 400 x 400 mm

Packing Size
160 x 450 x 450 mm

Available finishes
Light Grey - Dark Grey - Dusk Grey - Vintage Brown - Copper Green - White Terrazzo - Black Terrazzo

Drain diameter
45 mm

Weight
14 kg

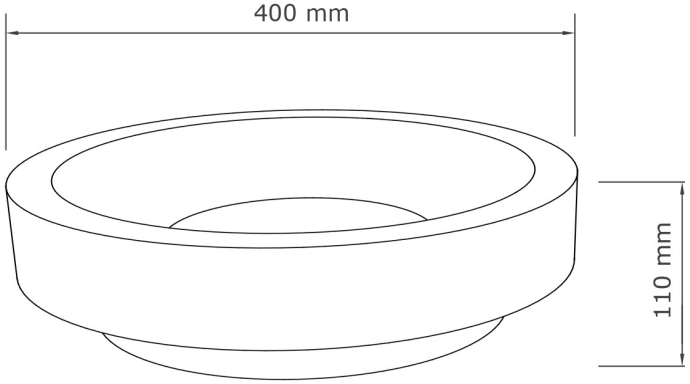

Available finishes

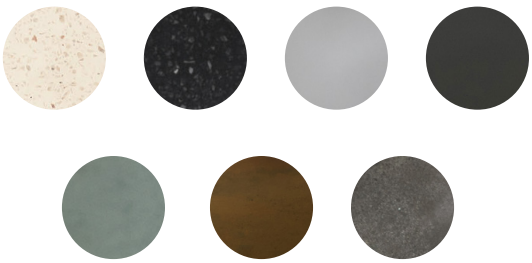

Black Terrazzo

Rimini

The Rimini is a deep, smooth basin featuring an intricate exterior pattern developed to expose the Terrazo's beautiful marble chips. This model boasts beautiful details from top to bottom.

Size (H x W x L)
150 x 400 x 400 mm

Packing Size
200 x 450 x 450 mm

Available finishes
White Terrazzo - Black Terrazzo

Drain diameter
45 mm

Weight
15 kg

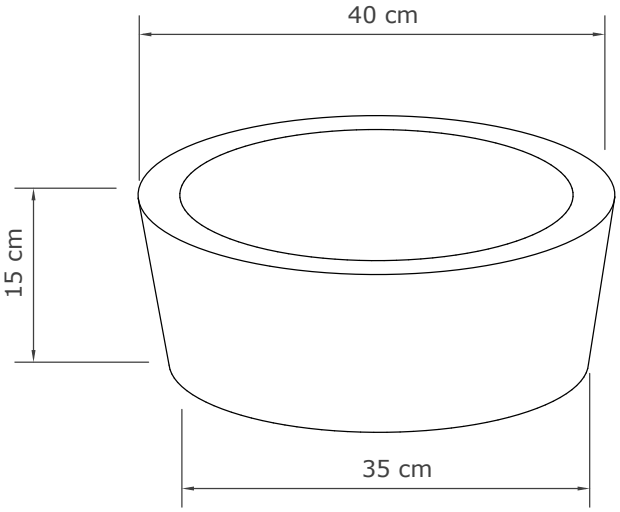

Available finishes

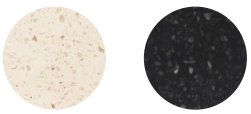

Black Terrazzo

Pescara

The defining feature of the Pescara is the hand carved signature on it's exterior. Also, this basin is constructed with extra thick walls, thus is extremely robust. Exclusively available in our signature black or white Terrazzo as this material is perfect for carving.

Size (H x W x L)
150 x 400 x 400 mm

Packing Size
200 x 450 x 450 mm

Available finishes
White Terrazzo - Black Terrazzo

Drain diameter
45 mm

Weight
19 kg

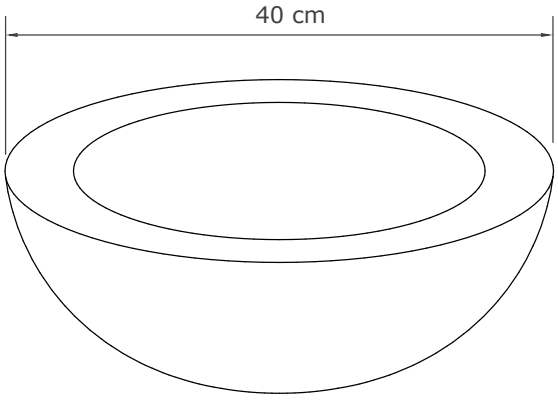

Available finishes

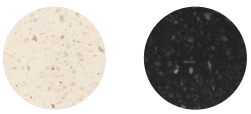

Dusk Grey

Cieza

The Cieza with it's modern, sleek appearance is a unique design object for any bathroom or washroom.

Size (H x W x L)
120 x 380 x 600 mm

Packing Size
140 x 400 x 620 mm

Available finishes
Dusk Grey - Vintage Brown - Copper Green

Drain diameter
45 mm

Weight
27 kg

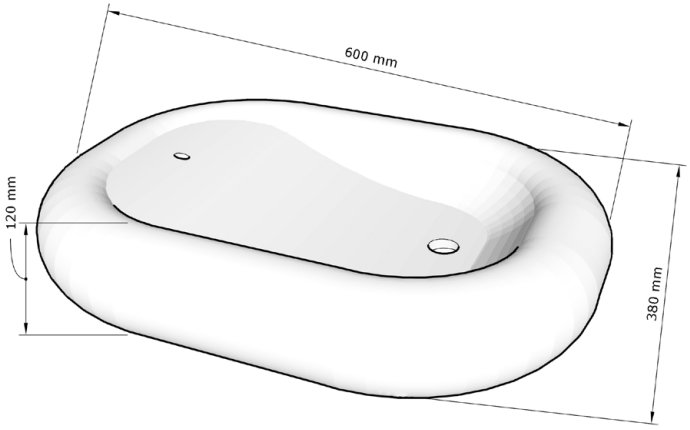

Available finishes

Luca

Meet Luca, a perfect example of simplicity. Enjoy the clean curves of this silky smooth oval basin in classic monotones, or experiment with our new finishes - copper green and vintage brown.

Size (H x W x L)
140 x 340 x 420 mm

Packing Size
215 x 410 x 480 mm

Available finishes
Light Grey - Dark Grey - Natural Concrete - Dusk Grey - Vintage Brown - Copper Green - White Terrazzo - Black Terrazzo

Drain diameter
45 mm

Weight
12 kg

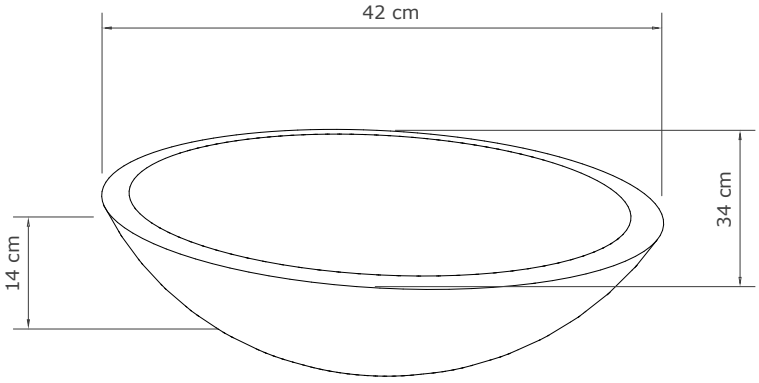

Available finishes

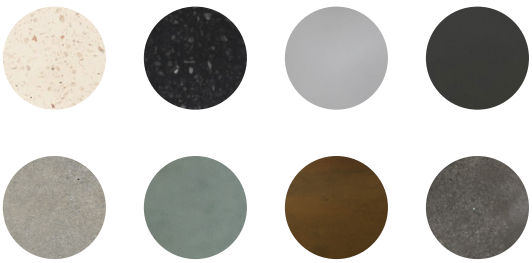

Luca Grande

The Luca Grande embraces the same simplicity as our original Luca model, but with a more dynamic, wider form. This width gives the basin an added visual impact, whilst retaining the soft, smooth curves of the Luca.

Size (H x W x L)
140 x 380 x 550 mm

Packing Size
215 x 450 x 620 mm

Available finishes
Light Grey - Dark Grey - Natural Concrete - Dusk Grey - Vintage Brown - Copper Green - White Terrazzo - Black Terrazzo

Drain diameter
45 mm

Weight
15 kg

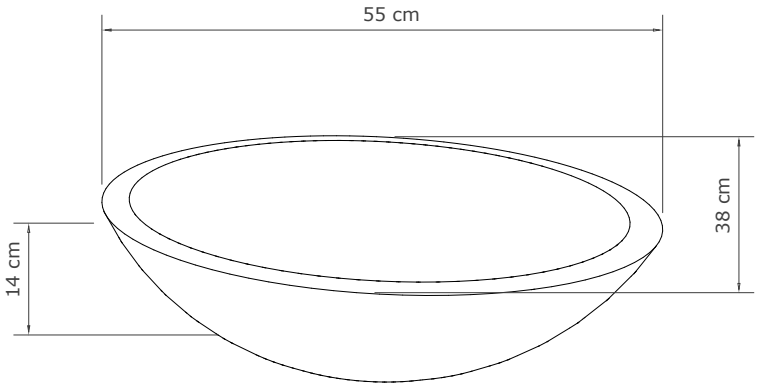

Available finishes

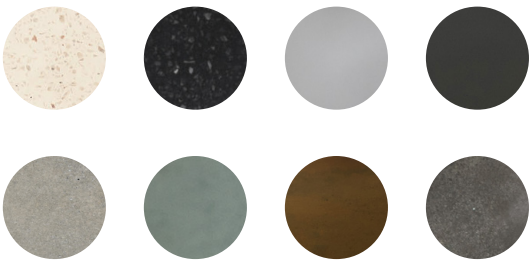

White Terrazzo

Novara

The Novara with it's smooth oval and charismatic curves is suitable for all bathroom styles.

Size (H x W x L)
140 x 325 x 510 mm

Packing Size
160 x 350 x 530 mm

Available finishes
Light Grey - Dark Grey - Natural Concrete - Dusk Grey - Vintage Brown - Copper Green - White Terrazzo - Black Terrazzo

Drain diameter
45 mm

Weight
12 kg

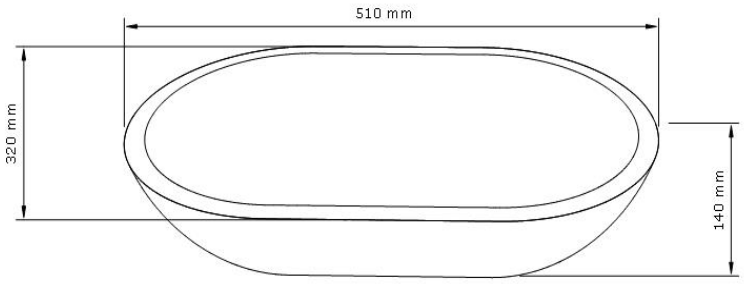

Available finishes

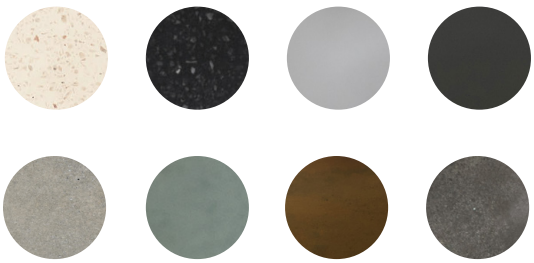

Mojo

The Mojo with its modern, elegant and oval curves is not only stylish, but also flamboyant due to its tough character.

Size (H x W x L)
120 x 380 x 600 mm

Packing Size
170 x 430 x 650 mm

Available finishes
Dusk Grey - Natural Concrete - Vintage Brown - Copper Green

Drain diameter
45 mm

Weight
10 kg

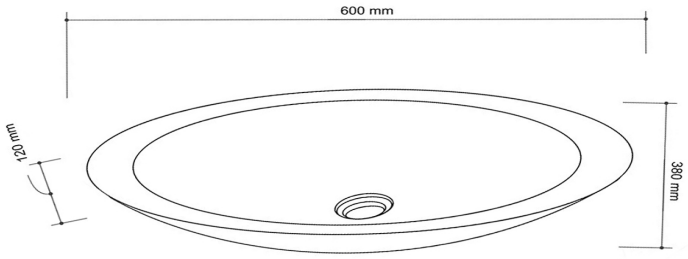

Available finishes

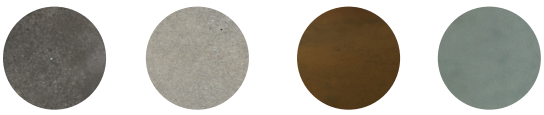

Florentina

Featuring bold edges, nuanced by a soft curve - the beauty of the Florentina is in it's details. A broad, spacious basin that has presence - perfect with any of our finishes.

Size (H x W x L)
140 x 320 x 450 mm

Packing Size
210 x 390 x 520 mm

Available finishes
Light Grey - Dark Grey - Natural Concrete - Dusk Grey - Vintage Brown - Copper Green - White Terrazzo - Black Terrazzo

Drain diameter
45 mm

Weight
17 kg

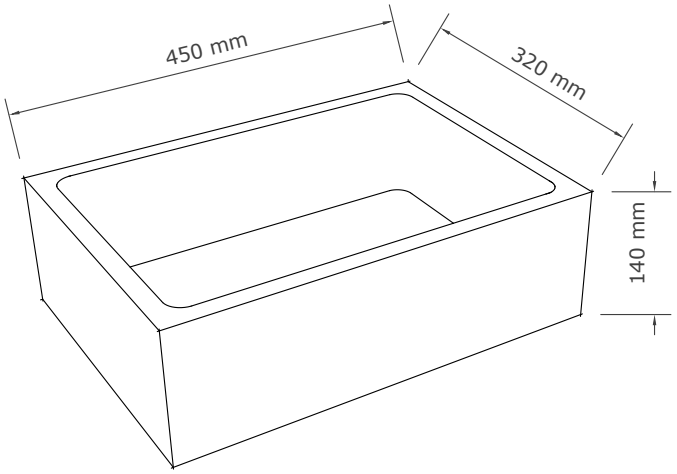

Available finishes

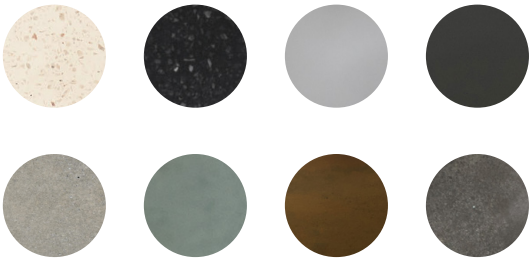

Bologna

It's sharp, striking contours and elegantly flat form make the Bologna a truly captivating basin. Available in Terrazzo and classic concrete colours.

Size (H x W x L)
80 x 450 x 500 mm

Packing Size
130 x 500 x 550 mm

Available finishes
Light Grey - Dark Grey - Natural Concrete - Dusk Grey - Vintage Brown - Copper Green - White Terrazzo - Black Terrazzo

Drain diameter
45 mm

Tap
Diameter: 35 mm
Tailpiece: ≥ 50 mm

Weight
20 kg

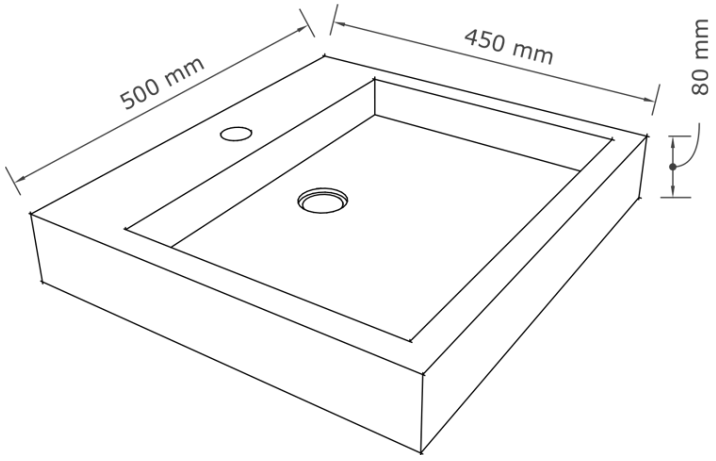

Available finishes

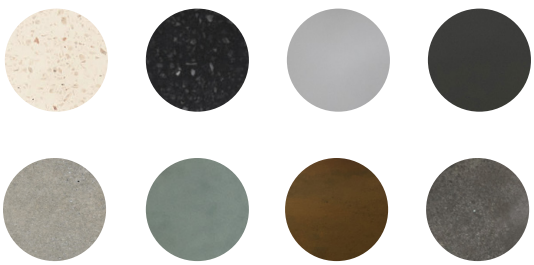

Dark Grey

Torino

The Torino has it all - flawless sweeping curves extends from both sides, meeting at the drain. This model is available in our full range of finishes (including our exclusive smooth line Terrazo).

Size (H x W x L)
120 x 350 x 495 mm

Packing Size
170 x 400 x 545 mm

Available finishes
Light Grey - Dark Grey - Natural Concrete - Dusk Grey - Vintage Brown - Copper Green - White Terrazzo - Black Terrazzo

Drain diameter
45 mm

Weight
25 kg

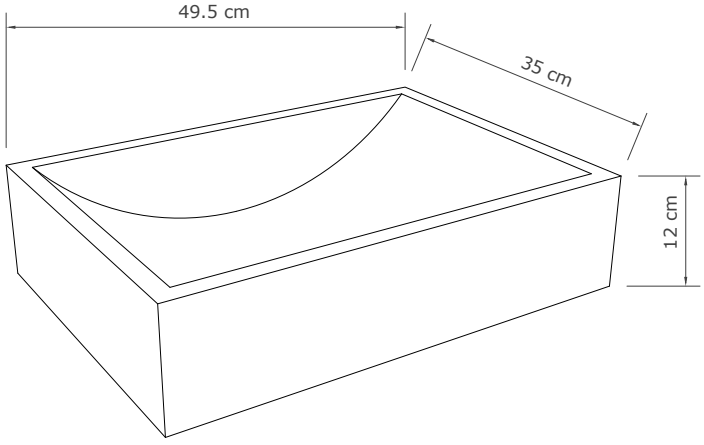

Available finishes

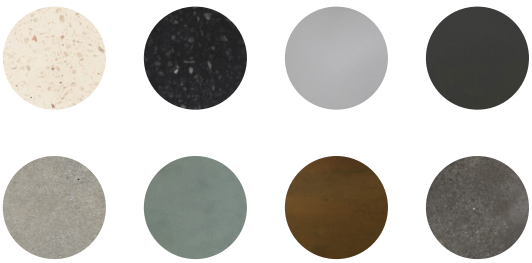

Dusk Grey

Grappa

With it's clean, robust edges and vertical presence, the Grappa has authority over any bathroom. This model is pristine in our classic light or dark concrete finishes, and of course our luxury Terrazzo.

Size (H x W x L)
150 x 400 x 400 mm

Packing Size
200 x 450 x 450 mm

Available finishes
Light Grey - Dark Grey - Natural Concrete - Dusk Grey - Vintage Brown - Copper Green - White Terrazzo - Black Terrazzo

Drain diameter
45 mm

Weight
13 kg

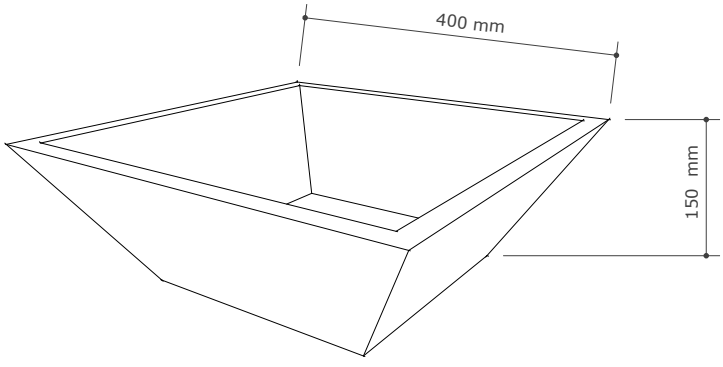

Available finishes

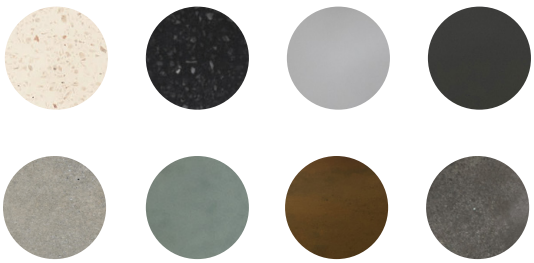

Copper Green

Genova

Although featuring but a simple curve the Genova basin makes any bathroom equisite. Although modern in design best represented in black and white terrazzo.

Size (H x W x L)
110 x 400 x 400 mm

Packing Size
160 x 450 x 450 mm

Available finishes
Light Grey - Dark Grey - Dusk Grey - Vintage Brown - Copper Green - White Terrazzo - Black Terrazzo

Drain diameter
45 mm

Weight
14 kg

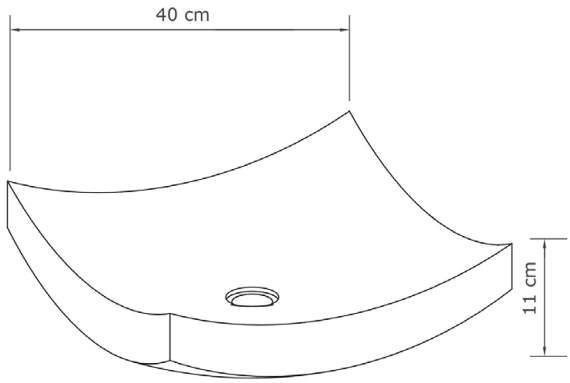

Available finishes

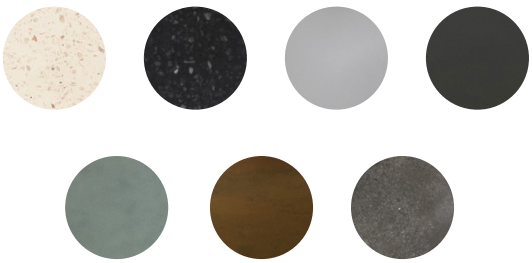

Como

The Como, is with its refined contours not only a feast to the eye, but is also extremely functional due to the plate in the middle. where various accessories can be stored.

Size (H x W x L)
70 x 380 x 700 mm

Packing Size
120 x 430 x 750 mm

Available finishes
Light Grey - Dark Grey - White Terrazzo - Black Terrazzo

Drain diameter
45 mm

Weight
26 kg

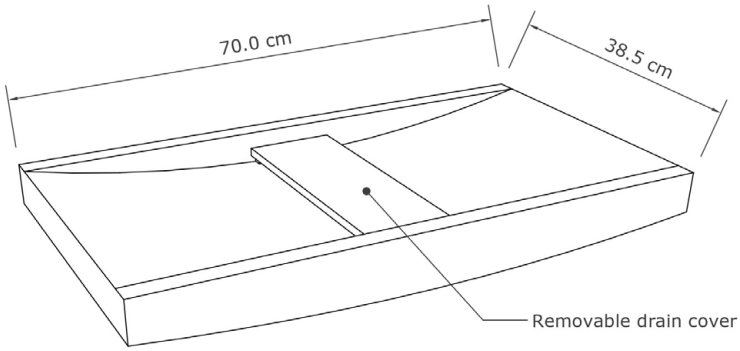

Available finishes

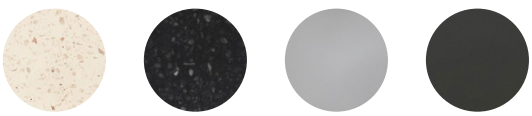

Dusk Grey

Horizon

The Horizon encompasses a broad, dynamic curve spanning nearly one metre across. Upon special request, one or two tap holes can be installed with this model.

Size (H x W x L)
140 x 450 x 900 mm

Packing Size
200 x 500 x 960 mm

Available finishes
Light Grey - Dark Grey - Dusk Grey - Vintage Brown - Copper Green - White Terrazzo - Black Terrazzo

Drain diameter
45 mm

Weight
60.5 kg

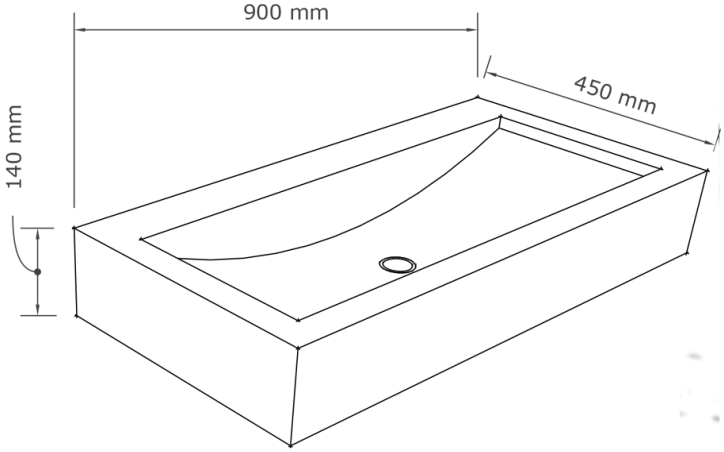

Available finishes

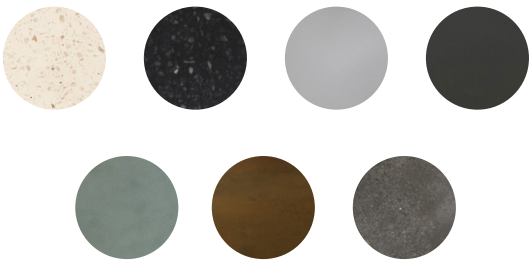

SOL

The seductive Sol is defined by it's smooth lagoon like bowl, which interacts beautifully with the water to create a dynamic bathroom experience.

Size (H x W x L)
120 x 450 x 800 mm

Packing Size
170 x 500 x 850 mm

Available finishes
Light Grey - Dark Grey - Dusk Grey - Vintage Brown - Copper Green - White Terrazzo - Black Terrazzo

Drain diameter
45 mm

Tap
Diameter: 35 mm
Tailpiece: ≥ 45 mm

Weight
31 kg

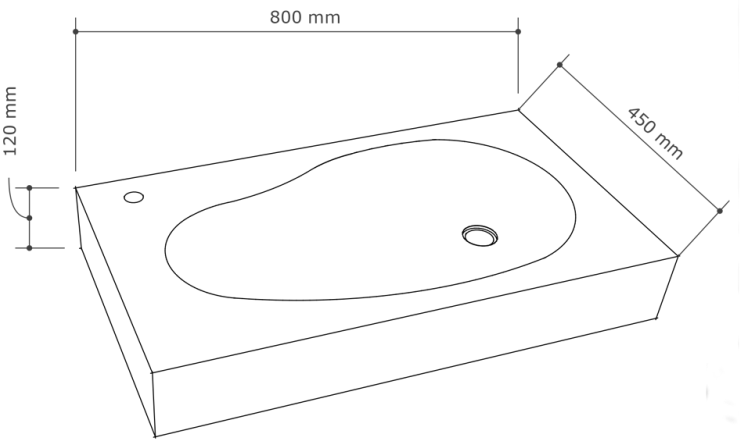

Available finishes

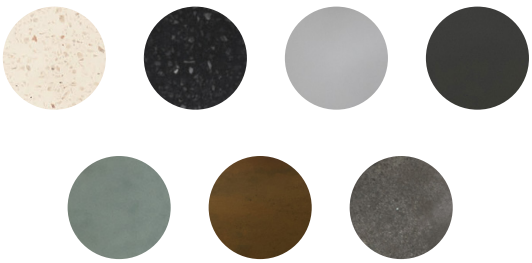

Vintage Brown

Diamond Piccola

The Diamond Piccola is the smallest model of our diamond series and suits perfect for the smaller bathroom. The diamond series are defined by their mesmerizing geometric form. Distinctive chiseled edges contrast a smooth tempting interior to make the diamond series completely unique.

Size (H x W x L)
160 x 270 x 440 mm

Packing Size
210 x 320 x 490 mm

Available finishes
Light Grey - Dark Grey - Dusk Grey - Vintage Brown - Copper Green - White Terrazzo - Black Terrazzo

Wall mount suitable
Yes - Brackets included

Drain diameter
45 mm

Weight
18 kg

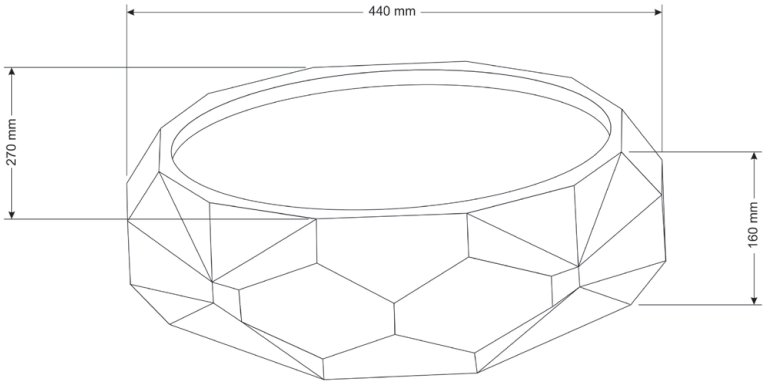

Available finishes

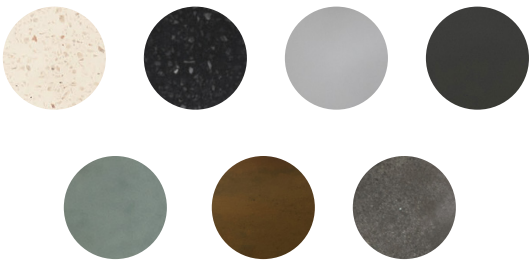

Diamond

The Diamond Medio has a deeper shape and makes it more elegant than its brothers. The diamond series are defined by their mesmerizing geometric form. Distinctive chiseled edges contrast a smooth tempting interior to make the diamond series significantly unique.

Size (H x W x L)
160 x 370 x 500 mm

Packing Size
210 x 420 x 550 mm

Available finishes
Light Grey - Dark Grey - Natural Concrete - Dusk Grey - Copper Green - Vintage Brown - White Terrazzo - Black Terrazzo

Drain diameter
45 mm

Weight
25 kg

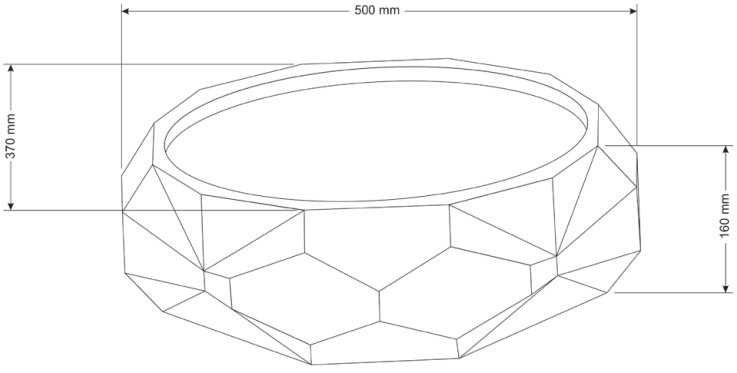

Available finishes

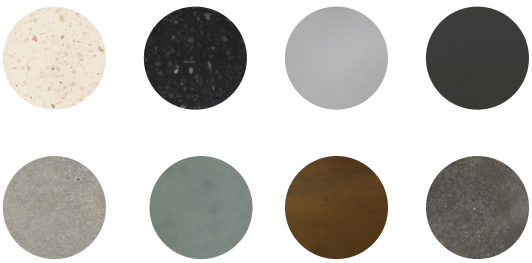

Dusk Grey

Diamond
Mezzo

The Diamond Mezzo, tough and elegance combined. A stainless steel plate is located in the middle of this captivating eye catcher.

Size (H x W x L)
Basin: 140 x 520 x 1000 mm
Drain cover: 3 x 70 x 50 mm

Packing Size
190 x 570 x 1050 mm

Available finishes
Dusk Grey - Vintage Brown - Copper Green

Material drain cover
Stainless steel plate (SS304)

Drain diameter
45 mm

Weight
54 kg

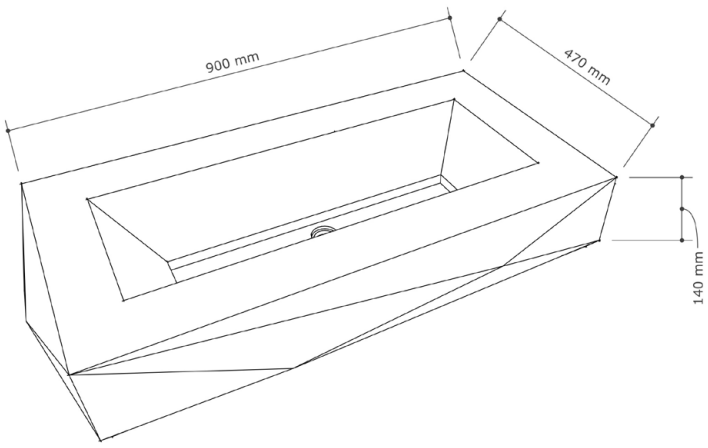

Available finishes

- **Drain cover**

Diamond Grande

Due to it's length, this Diamond basin can be installed with one, two or three taps, perfect for various functions. Inside, a high grade steel drain adds the finishing touch - this is removable and easy to clean.

Size (H x W x L)
Basin: 140 x 470 x 1300 mm
Drain cover: 3 x 70 x 795 mm

Packing Size
200 x 530 x 1360 mm

Available finishes
Light Grey - Dark Grey - Dusk Grey - Vintage Brown - Copper Green - White Terrazzo - Black Terrazzo

Material drain cover
Stainless steel plate (SS304)

Drain diameter
45 mm

Weight
72 kg

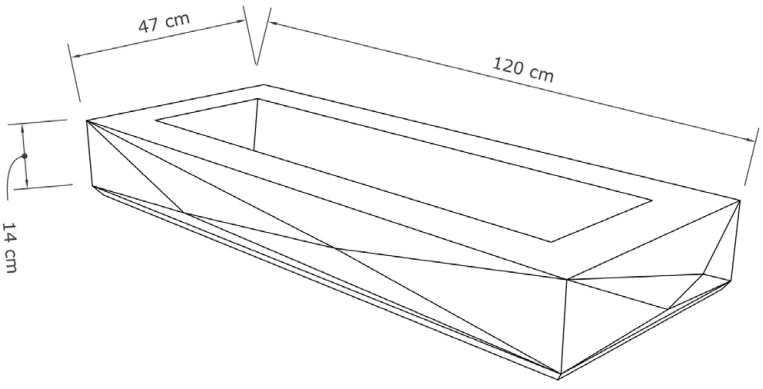

- **Drain cover**

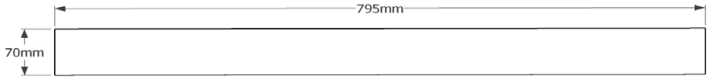

Available finishes

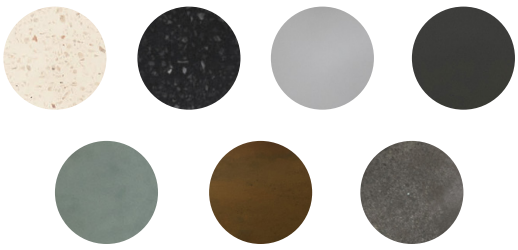

VISO Pedestal | Light Grey

Light Grey

Viso pedestal +

The VISO Pedestal + is a free-standing basin with a unique character. This exclusive two piece design brings life to any establishment and can be either floor mounted or wall mounted.

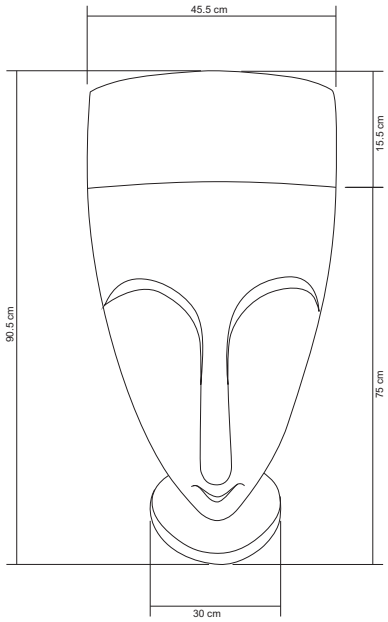

Size (H x W x L)
900 x 450 x 450 mm

Packing Size
950 x 500 x 500 mm

Available finishes
Light Grey - Dark Grey - Dusk Grey - Vintage Brown - Copper Green - White terrazzo - Black terrazzo

Drain diameter
45 mm

Tap
Diameter: 35 mm
Tailpiece: ≥ 50 mm

Weight
70 kg

Available finishes

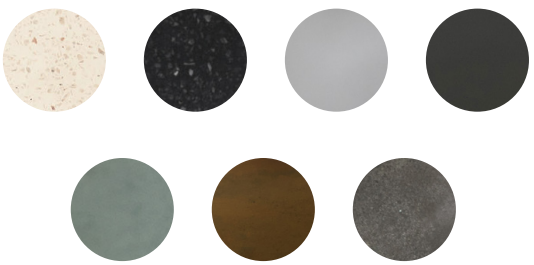

Light Grey

Viso pedestal

Viso Pedestal is a free-standing basin with a unique character. This exclusive two piece design brings life to any establishment and can be either floor mounted or wall mounted.

Size (H x W x L)
900 x 450 x 450 mm

Packing Size
950 x 500 x 500 mm

Available finishes
Light Grey - Dark Grey - Dusk Grey - Vintage Brown - Copper Green - White Terrazzo - Black Terrazzo

Drain diameter
45 mm

Weight
70 kg

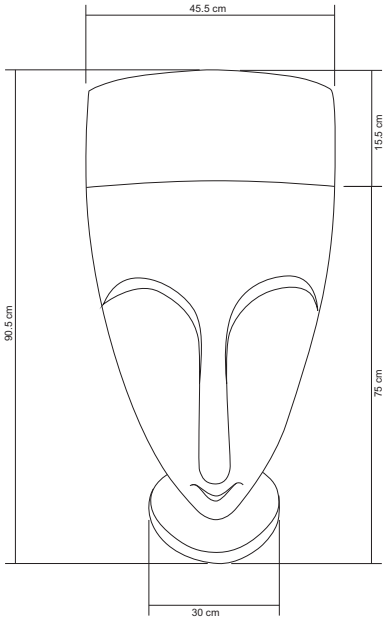

Available finishes

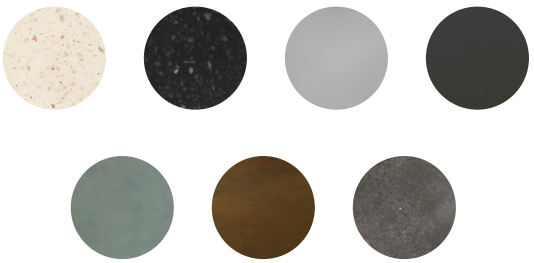

Light Grey

Twin

The twin basin boasts a beautifully unique powder-coated iron dome surrounded by smooth curves. This model is perfect in pair, but can be appreciated alone. Available in classic finishes for luxury styling.

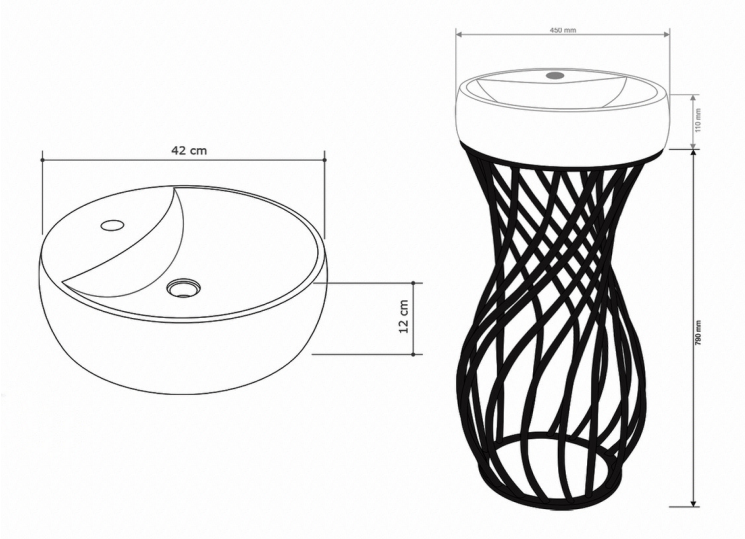

Size (H x W x L)
Basin: 120 x 420 x 420 mm
Iron dome: 790 x 420 x 380 mm

Packing Size
170 x 500 x 500 mm
830 x 450 x 420 mm

Available finishes
Light Grey - Dark Grey - White Terrazzo - Black Terrazzo

Material iron dome
Powdercoated iron

Color iron dome
Math Black

Drain diameter
45 mm

Tap
Diameter: 35 mm
Tailpiece: ≥ 45 mm

Weight
Basin: 28 kg
Iron dome: 15 kg

Available finishes

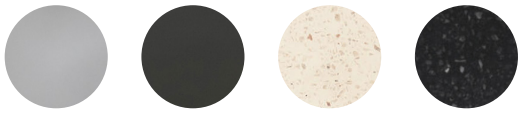

Basic I, natural concrete

BES

The BES, with its modern and industrial look, is a showpiece for any bathroom. The exotic countertop is made of solid kelengkeng wood from Indonesia. The base is powder coated to last a lifetime.

Size (H x W x L)	Packing Size
Sink: 80 x 480 x 800 mm	100 x 510 x 830 mm
Countertop: 80 x 1200 x 500 mm	100 x 1230 x 530 mm
Base: 760 x 500 x 220 mm (2x)	780 x 520 x 240 mm (2x)

Available finishes

Dusk Grey - Vintage Brown - Copper Green

Material countertop	Material base
Kelengkeng wood	Powdercoated steel
Color countertop	**Color base**
Sienna Brown	Math Black
Weight	**Drain diameter**
Sink: 40 kg	45 mm
Countertop: 25 kg	
Base: 2 x 5.6 kg	

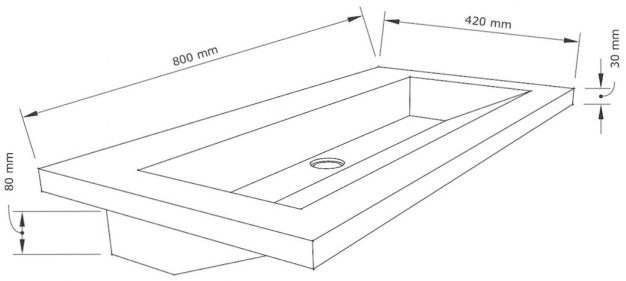

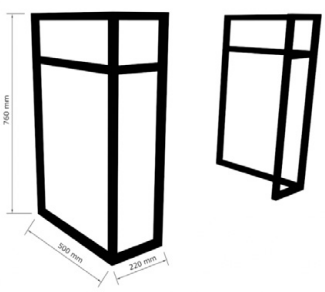

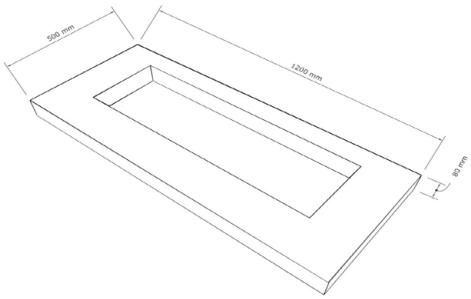

Available finishes

Dark Grey

Double Dutch

The Double Dutch, is not only absolute stunning, but also very functional. The ebony gray cabinet is made of Teak- Bio Composite that is indistinguishable from real wood and is fully recyclable. The drawer is easy to open with the sliding system.

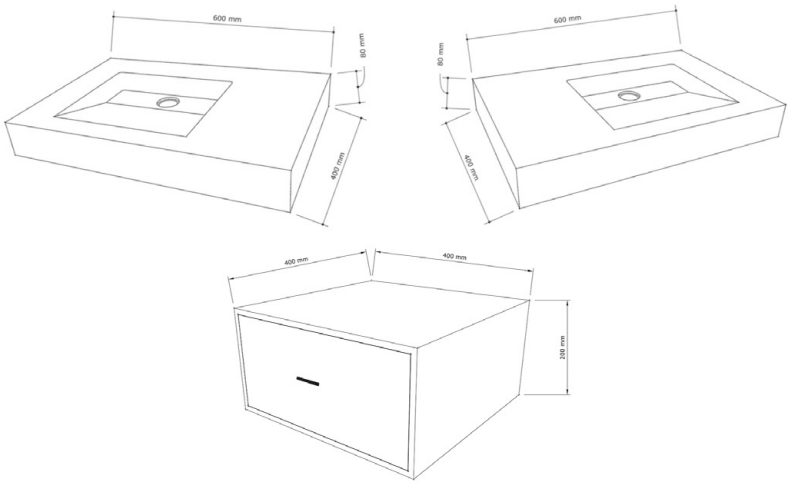

Size (H x W x L)
Basin: 80 x 400 x 600 mm
Cabinet: 200 x 400 x 400 mm

Packing Size
100 x 420 x 620 mm
220 x 420 x 420 mm

Available finishes
Dusk Grey - Vintage Brown - Copper Green

Material Cabinet
Teak- Bio Composite

Color Cabinet
Ebony Grey

Drain diameter
45 mm

Tap
Diameter: 35 mm
Tailpiece: ≥ 45 mm

Wall mount suitable
Yes - brackets included

Sliding system
Yes

Weight
Basin 17 kg (2x)
Cabinet: 15 kg

Available finishes

Our range of finishes

Please note: natural concrete, dusk grey, vintage brown and copper green may vary in colour as they are natural finishes, thus each version is slightly unique.

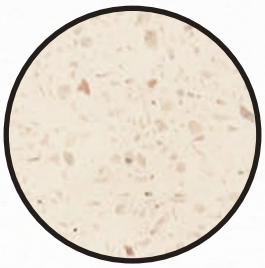

White Terrazzo

Black Terrazzo

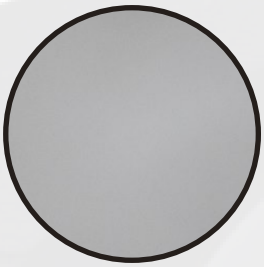

Light Grey Concrete

Dark Grey Concrete

Natural Concrete

Vintage Brown Concrete

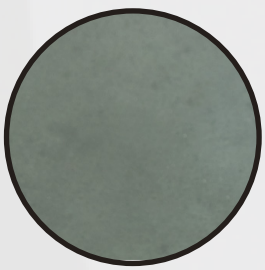

Copper Green Concrete

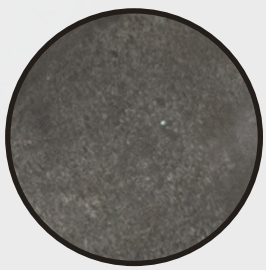

Dusk Grey Concrete

conspire

Encapsulates modern design with functionallity at its heart

E-mail: Info@con-spire.com

Website: Con-spire.com

Phone & Fax: + (62) 274 6465 161

Address:
Sribitan, Rt. 02 Rw. 02
Bangun Jiwo, Kasihan,
Bantul, Yogyakarta,
55184

Opening hours: Monday-Friday: 9:00am – 5:00pm

Follow us on social media: ConSpire Bathroom Design